KOMATSU

Utility

SK
714-5

SK714-5

SK714-5

Skid Steer Loader

NET POWER
SAE J1349
34,7 kW

OPERATING WEIGHT
2.530 kg

OPERATING CAPACITY
650 kg

NEXT GENERATION

Designed not only to do the work required, but to do it effectively and efficiently. Safe, environmental-friendly constructed employing state-of-the-art technology, the SK714 will help improve our environment in the twenty-first century.

Hydraulic servocontrols

The new compact loader is the result of the skills, technology and success that KOMATSU has acquired in over eighty years of experience, and of its constant contact with users from all over the world during the product development phases.

Hydraulic servocontrols

Easier to use, they require very little effort, while ensuring extremely precise manoeuvres.

Komatsu CLSS

The hydraulic system, which automatically combines force and speed, ensures perfect control over all movements.
Double-adjustment travel pumps and axial piston engines with double travel speed, provide above-standard performance, ensuring exceptional versatility and rapidity.
Maximum travel speed: 16 km/h
Maximum traction force: 3200 kg

Comfort

The ease of operation, just two steps to reach the seat, the ergonomic access and the ample space inside the cab assure maximum operating comfort and maximum visibility.

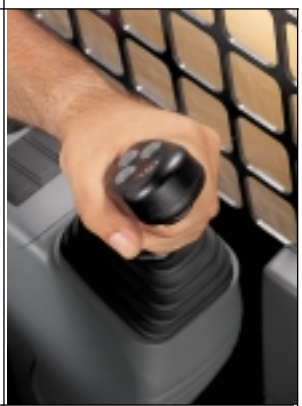

Safety

The wheelbase and axle distance ensure reduced tyre wear and balanced weight distribution, for safe operation on any ground. The low profile of the engine hood guarantees excellent visibility on rear part of the machine. A system of sensors on the safety bars and the seat prevents all movements if unauthorised manoeuvres are attempted, with a brake being automatically engaged on the transmission.

Instrumentation

The new concept KOMATSU-patented dashboard is mounted on the safety bar, and is always visible to the operator.

Versatility

The foot accelerator ensures greater control over power during operation.
Ready for use with any equipment, the base version features an auxiliary hydraulic circuit with proportional control.
The control pedal can also be locked in the maximum flow rate position.

Super Flow version

The Super Flow system increases the flow of oil available to the equipment, and features a draining system and electrical connections.
The joysticks and the proportional pedal make it possible to control all the system functions.
Super Flow circuit max flow rate: 100 l/min

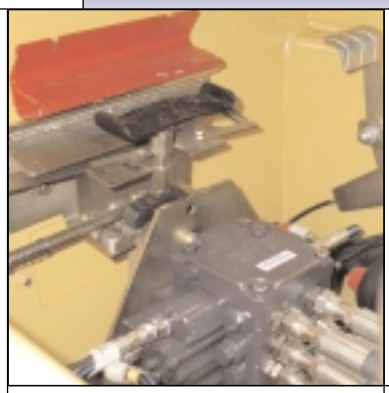

Easy and quick maintenance

The simple opening of the engine hood makes refilling and periodical checks easy. In addition, the tilting radiators can be easily reached by simply opening the rear door.
One lock only for the hood and the door, which together enclose and protect all service and refill points.

- Pins with extended greasing intervals (250 hours);
- Battery with charge gauge;
- Air filter with safety cartridge;
- Removable polyvinyl tank;
- See-through gas oil filter;
- Environmental-friendly draining systems.

Tilting cab

The combined tilting of the cab, engine hood and footboard (patented system) offers complete access to all the components and allows extraordinary maintenance operations to be performed from several positions.

SPECIFICATIONS

ENGINE

A new generation of engine developed to comply with the stricter emission controls (EURO 2).

Model . . . . . .Komatsu 4D88E-1FD
Type . . . . . .diesel engine, 4 in line cylinders
Bore x stroke . . . . . .88x90 mm
N° of cylinders 4

Combustion . . . . . .direct injection
Aspiration . . . . . .natural
Max power . . . . . .37 kW
Rated power:
(SAE J1349) . . . . . .34,7 kW/47,2 HP - 2.800 rpm
(80/1269/EC) . . . . . .34,0 kW/46,2 HP - 2.800 rpm
Max Torque . . . . . .142 Nm - 1.800 rpm

Cooling system . . . . . water
Air filter . . . . . .dry with safety element
Starting system . . . . . .electric motor with pre-heating air system for cold climate

OPERATING WEIGHT

Operating weight of machine with standard bucket, full tank of fuel and an 80 kg operator (ISO 6016) . . . . . 2.530 kg

HYDRAULIC SYSTEM

Type . . . . . .Komatsu CLSS (Closed Load Sensing System)
Pump . . . . . .gear
Max flow . . . . . .62 l/min
Max pressure . . . . . .191 bar
Control valve . . . . . 3 elements fully Servo-controlled

Front equipment hydraulic system "SUPER FLOW" (Optional):

Max flow . . . . . .100 l/min
Max pressure . . . . . .191 bar
Control valve . . . . . 3 elements

ELECTRIC SYSTEM

Rated voltage . . . . . 12 V
Battery . . . . . 80 Ah
Alternator . . . . . 40 A

CONTROLS

Proportional Servo-controls (PPC). The left hand lever controls the machine movements, the right one controls the working equipment. The PPC pedal controls the auxiliary circuit for attachments. A safety system neutralises all operations when the safety bars are risen or the operator is not seated.

TRANSMISSION

Type . . . . . .hydrostatic
Pumps . . . . . 2 x variable displacement with 2 stage
Motors . . . . . .2 x axial pistons with two speeds
Final transmission with heavy duty type roller chains immersed in oil bath are always oil connected with the four driving wheels.
Speeds: - Working . . . . . .10,5 km/h
- Travel . . . . . .16 km/h
Oil immersed discs for both parking and working breaks with negative action and automatic insertion.

TYRES

Standard 10-16.5 8PR
Optional . . . . . .10-16.5 8PR (wide tread)
10-16.5 (Airboss)

NOISE LEVEL

(Dynamic test)
Sound power level test . . . . . 101 LwA dB(A)
Sound pressure level . . . . . 86 LpA dB(A)
The values inside and outside the cab are given according to the directive EC89/514 and EC95/27.

REFILLS

Hydraulic system . . . . . 38 l
Fuel . . . . . 53 l
Hydraulic transmission (chains) . . . . . 15,5 + 15,5 l
Engine oil . . . . . 8 l

LOADER

Operating load (ISO 5998) . . . . . 650 kg
Tipping load (ISO 8313) . . . . . 1.300 kg
Standard bucket capacity (ISO 7546) . . . . . 0,35 m³
Bucket breakout force (ISO 8313) . . . . . 1.716 daN (1.750 kg)
Max lifting capacity (ISO 8313) . . . . . .1.814 daN (1.850 kg)
Operating load with pallet forks . . . . . .400 kg
Max loading height with forks . . . . . 2.620 mm
Max reach with forks . . . . . .1.895 mm

DIMENSIONS

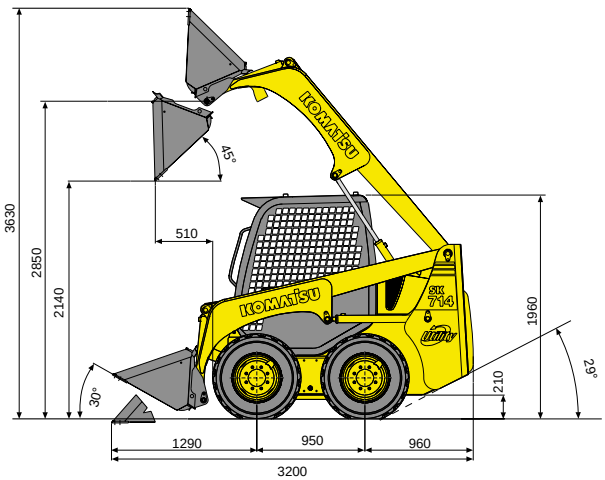

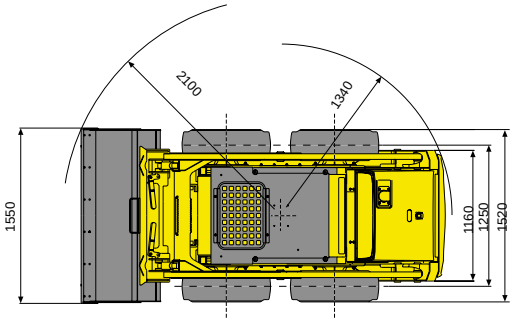

STANDARD EQUIPMENT

- ROPS-FOPS tilting cab
- Adjustable seat with safety belts
- Safety bars
- 2 speed transmission
- 2 front working lights
- Instrumentation: hour meter – LCD fuel level indicator – LCD water temperature indicator – safety warning lights : operator on board , safety bars – other lights: air filter clogging, engine oil pressure, generator, hydraulic oil filter, engine pre-heating, parking brakes, second travelling speed, working lights, direction indicators, floating.
- Automatic working and parking brakes
- Horn
- Accelerator pedal
- Bucket self leveling
- Auxiliary hydraulic circuit for attachments
- 12V electrical plug outside
- 10-16.5 8PR tyres
- Quick hitch for attachments: Universal type or Komatsu type
- 1.550 mm bucket with or without teeth

OPTIONAL EQUIPMENT

- Bucket float
- SUPER FLOW version with 3 elements main valve (with drain line and electric connection)
- Accessories for road homologation
- Adjustable seat with safety belts
- 10-16.5 8 PR wide tread tyres
- 10-16.5 Airboss tyres
- 1.730 mm bucket with or without teeth
- Cutting edge on teeth
- Bolted cutting edge (instead of teeth)
- 2 rear working lights
- Rotating beacon
- Back-up alarm
- Rear view mirrors
- Pallet forks
- Lifting hooks
- Side windows
- 12 V power outlet inside
- FOPS class 2 cab
- Closed cab with glass sides, door with wiper and heater
- Backhoe pre-setting
- Centrifugal air pre-filter
- Master disconnect switch
- Catalytic exhaust silencer
- Mudguards
- Additional modular rear counterweight (6 pieces, total 126 kg)

KOMATSU

Komatsu Utility Europe
Head Office
via Atheste 4
35042 Este (Padova) - Italy
Tel. +39 0429 616111
Fax +39 0429 601000
www.komatsuequipmentcentral.com
utility@komatsu.it

CE

COMPANY WITH ENVIRONMENTAL MANAGEMENT SYSTEM CERTIFIED BY DNV ISO 14001

stp - www.stp.it **947033621 - GB - 03/2003**

This specifications sheet may contain attachments and optional equipment that are not available in your area.
Please consult your local Komatsu distributor for those items you may require. Materials and specifications are subject to change without notice.